California Polytechnic State University Pomona
DEPARTMENT OF ELECTRICAL & COMPUTER ENGINEERING

Intro to Microelectronics Laboratory

ECE 2200L
Report #9

LAB 9 – Capturing Vo vs. Vi Transfer Characteristics of BJT, MOSFET, & CMOS Inverter

Prepared by
Elias Cortes & Kevyn Santos

Presented to
Aspet Gharakhanian

April 10, 2025

Introduction:

Our objective during this lab is to capture the voltage transfer characteristics of all three inverters & compare versus the simulation.

Parts List:

1. Resistors: 10 [kΩ], 100 [kΩ]
2. Transistors: 2N2222 (BJT), VN0106 (MOSFET)
3. IC: CD4007

Pre-Lab (work on next page):

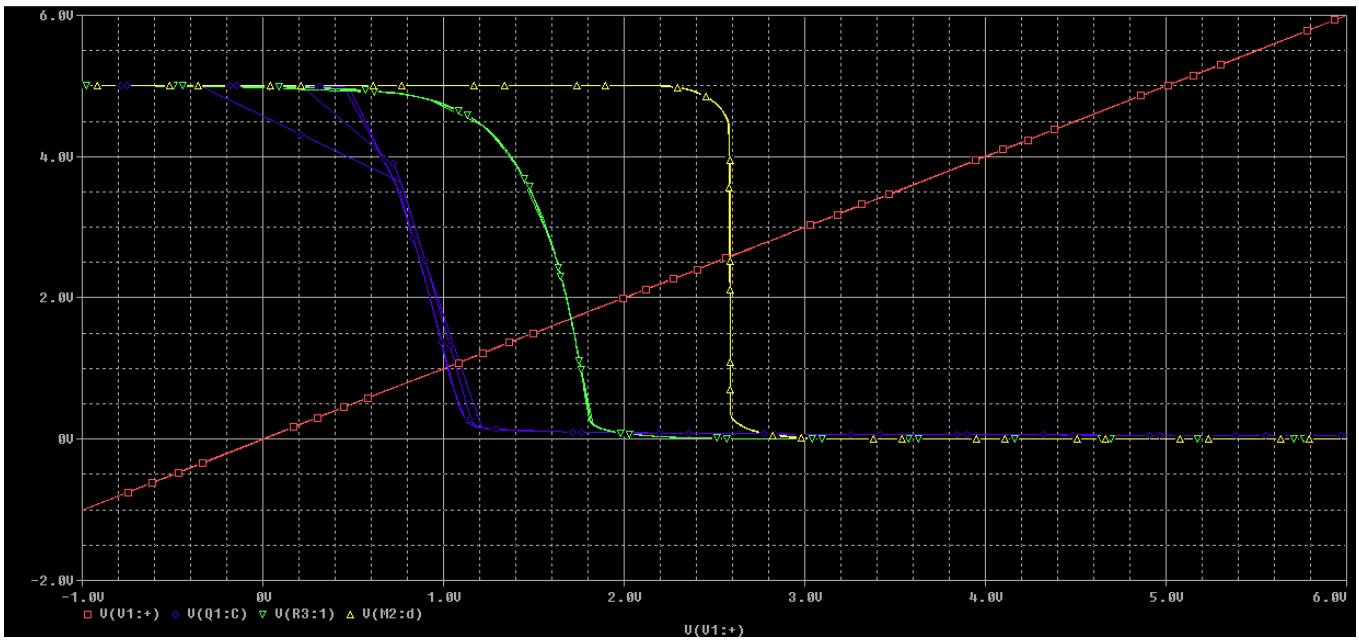

Fig. 1. Depicts simulated waveforms of circuit. Blue is the BJT, Green is the MOSFET, and Yellow is the CMOS inverter

Circuit Schematic:

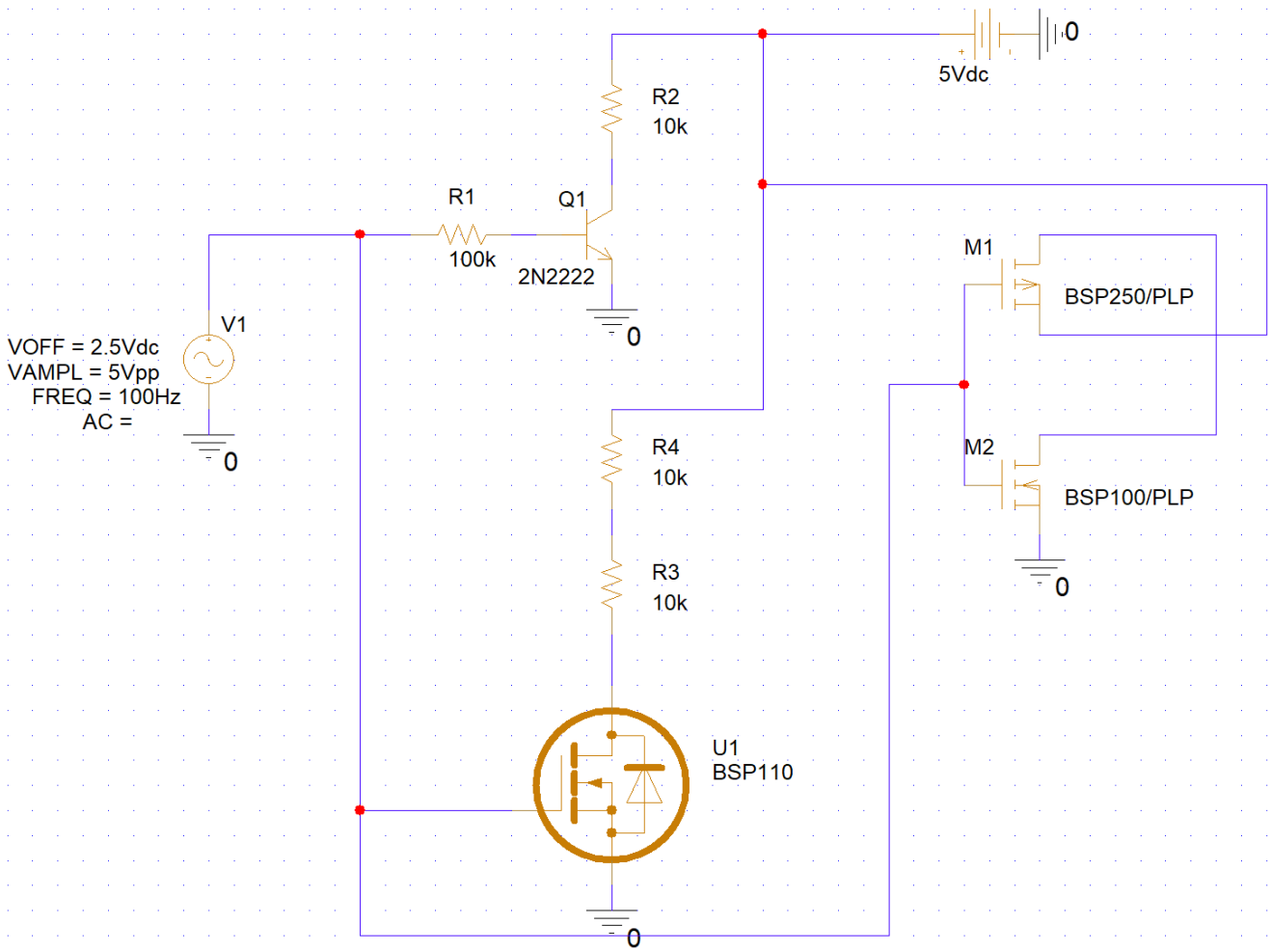

Experimental Data:

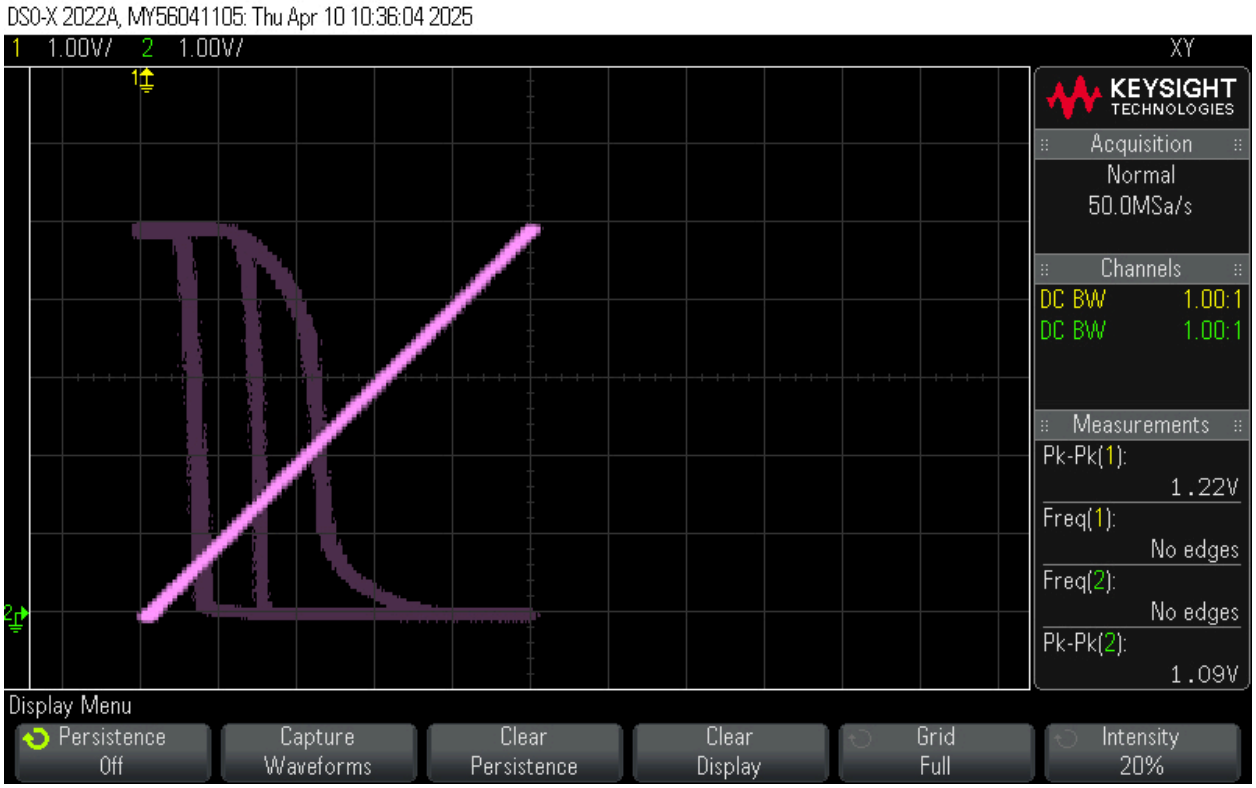

Fig. 2. Displays experimental transfer functions of circuit.

Post-Lab (Analysis of waveforms):

From the waveforms, it's obvious that the CMOS inverter has the best symmetry around the center. It inverts very nicely at 2.5 V. The BJT inverter is the worst of the three, where it begins to invert at around 0.7 V. This is not an ideal inverter as it can be very susceptible to noise. In the middle is the MOSFET, where it inverts at around 1.6 V. This is better but still not ideal. Going with the CMOS inverter is the best and most reliable option for digital applications.

Conclusion:

We observed from both Fig. 1 and Fig. 2, that they are extremely similar and each transfer function follows its counterpart. There are slight discrepancies as to what values the waveforms invert at by about 0.2 V compared to the simulation. This can be for many reasons such as noise, misalignment of the waveforms, or even real world tolerances from the components used. Overall, this experiment went really well and we were able to confirm the transfer characteristics of all three inverters.